DIODE

THEORY OF OPERATION

prepared by:

Gyro A. Madrona

Electronics Engineer

GRADING SYSTEM

FINAL GRADE

30%

PRELIM

30%

MIDTERM

40%

ENDTERM

TERM GRADE

50%

WEEKLY

50%

EXAM

100%

LABORATORY

PENALTY

0

ABSENT

3

45-min LATE

7 max

15-min LATE

TOPIC OUTLINE

The Unbiased Diode

The Biased Diode

- Reverse Bias and Forward Bias

Diode Parameters

Rectifier Circuits

- Half-Wave and Full-Wave

THE UNBIASED DIODE

Basic Construction

The **boarder** between the P-type and N-type material

Schematic Symbol

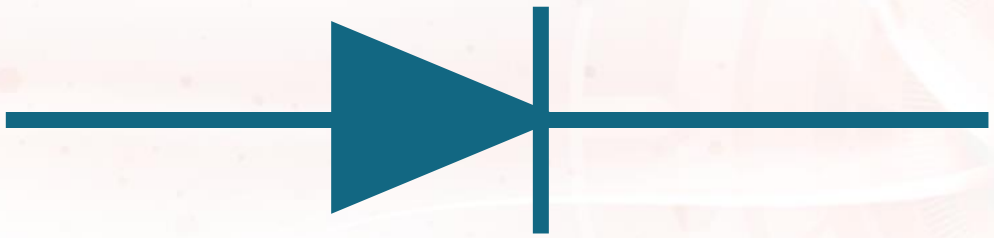

Anode

Cathode

"**Di**" stands for two

Construction of **two electrode**

BARRIER POTENTIAL

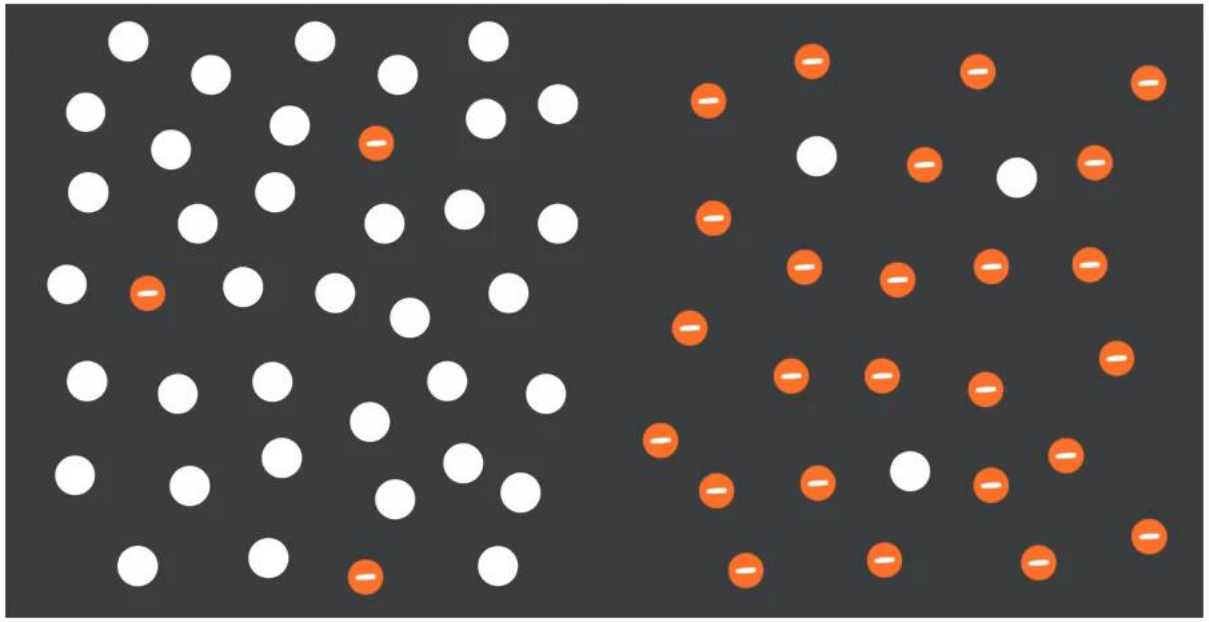

The electric field between the ions

- 0.3V for Germanium (Ge)
- **0.7V** for Silicon (**Si**)

Depletion Layer

- Charge-empty region

Dipole

- Pair of positive and negative ions at the junction

THE BIASED DIODE

REVERSE BIAS

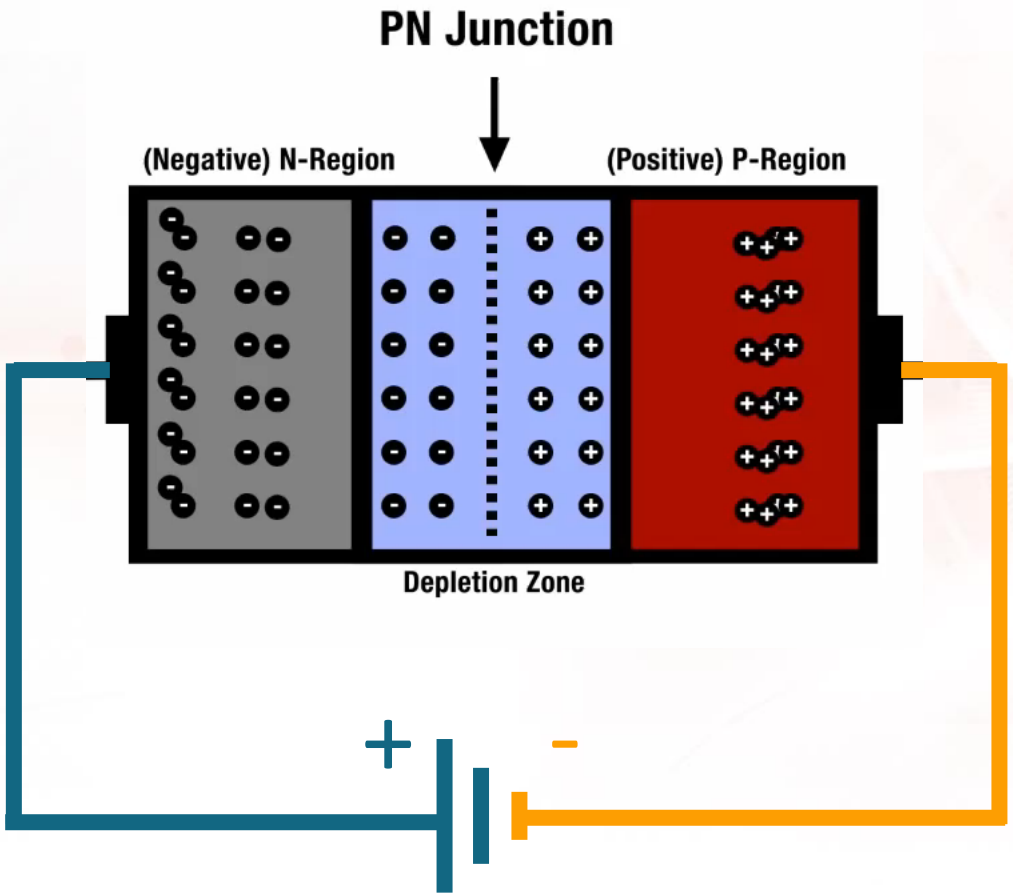

Bias

application of **power source**

Saturation Current

The **reversed current** caused by the thermally produced minority carriers

Surface-leakage Current

Caused by the surface **impurities** and **imperfections** in the crystal structure

BREAKDOWN VOLTAGE

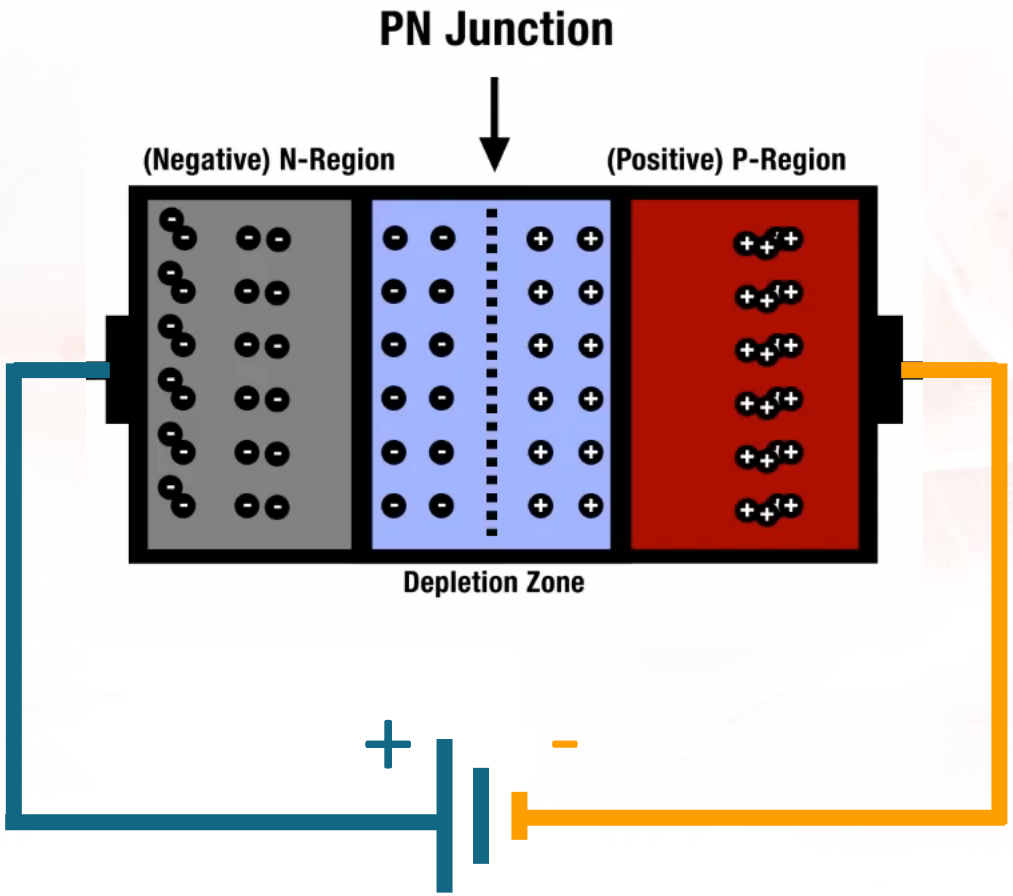

The maximum reverse voltage a diode can withstand before it is **destroyed**

50V (typ)

FORWARD BIAS

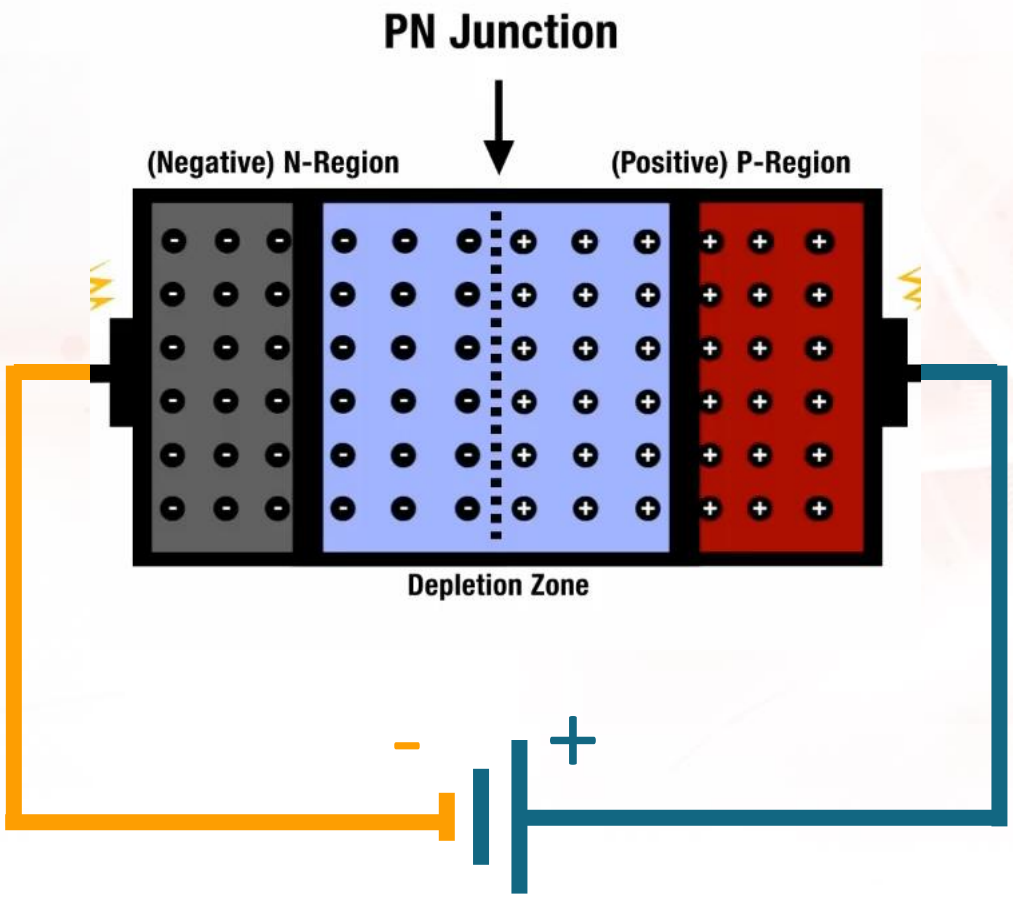

Current flows easily as long as the applied voltage is **greater** than the barrier potential

0.3V (Ge)

0.7V (Si)

DIODE PARAMETERS

TEMPERATURE

Ambient Temperature

Air **outside** the diode

Junction Temperature

Inside the diode

@ Conducting

Junction Temp > Ambient Temp

BARRIER POTENTIAL

Depends on the junction temperature

$$\frac{\Delta V}{\Delta T} = -2\text{mV}/^{\circ}\text{C}$$

EXERCISE

Assuming a barrier potential of **0.7 V** at an ambient temperature of **25°C**. Determine the **barrier potential** of a silicon diode when the junction temperature is

- **100°C**
- **0°C**
- **50°C**

REVERSE SATURATION CURRENT, I_s

The higher the junction temperature, the greater the saturation current

I_s **doubles** for each 10°C rise

$$\%\Delta I_s = 100\% \text{ per } \mathbf{10°C}$$

If the change in temperature are less than 10°C

$$\%\Delta I_s = \mathbf{7\%} \text{ per } \mathbf{°C}$$

EXERCISE

A silicon has a saturation current of **5nA** at **25°C**. What is the **saturation current** at **100°C**? At **80°C**?

SURFACE-LEAKAGE CURRENT, I_{SL}

Directly proportional to the **reverse voltage**

Surface-Leakage Resistance, R_{SL}

$$R_{SL} = \frac{V_R}{I_{SL}}$$

EXERCISE

If the surface leakage current is **2nA** for a reverse voltage of **25V**, what is the **surface-leakage current** for a reverse voltage of **35V**? of **100V**?

RECTIFIER CIRCUITS

HALF-WAVE RECTIFIER

Input

Forward-Biased

Output

HALF-WAVE RECTIFIER

Input

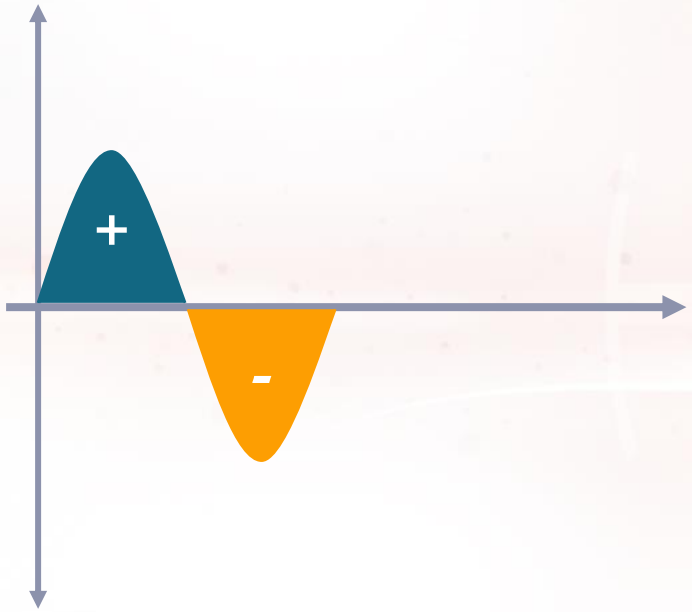

Reverse-Biased

Output

Input

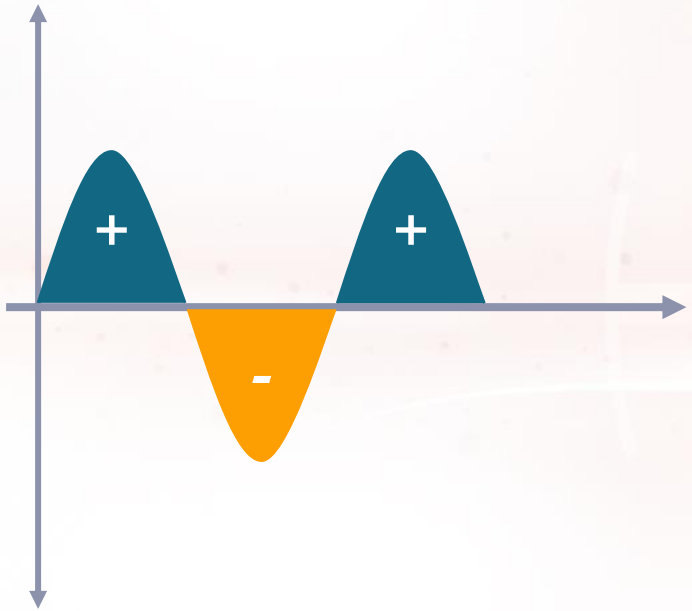

Forward-Biased

Output

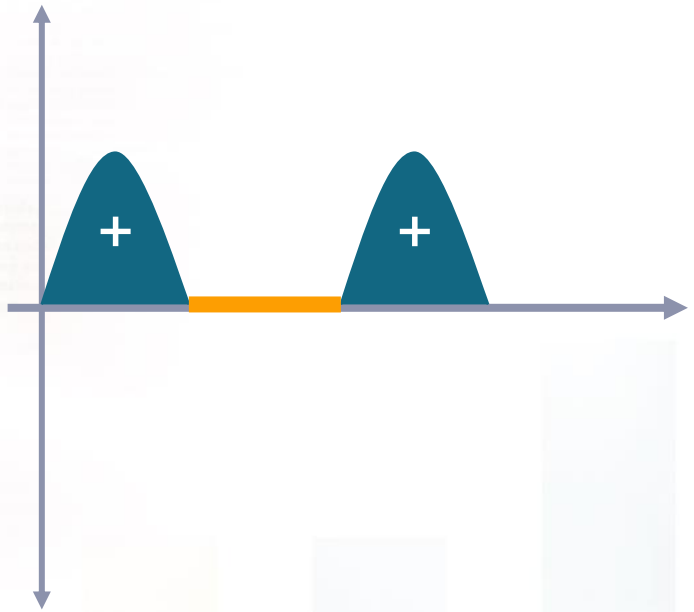

Input

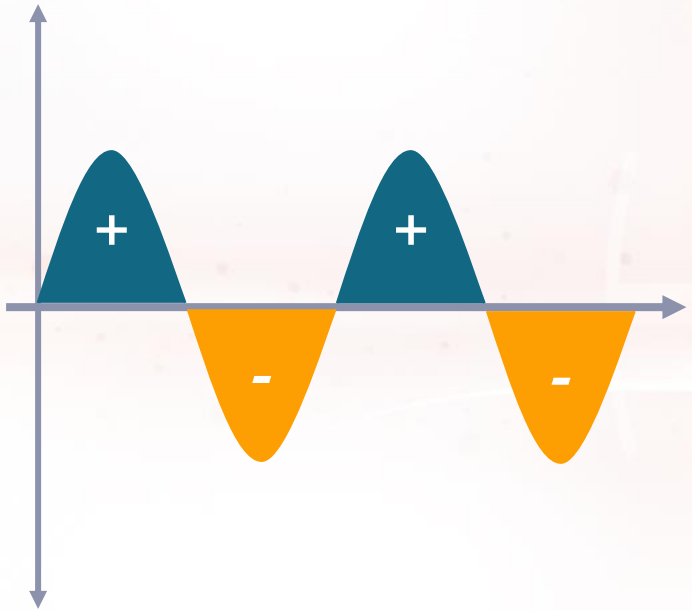

Reverse-Biased

Output

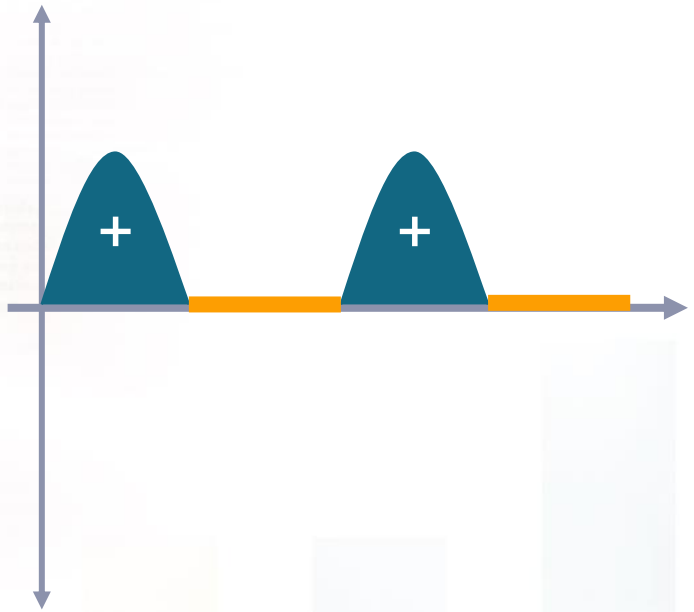

Rectifier

A circuit that converts **AC** voltage to **DC** voltage

FULL-WAVE CENTER-TAPPED RECTIFIER

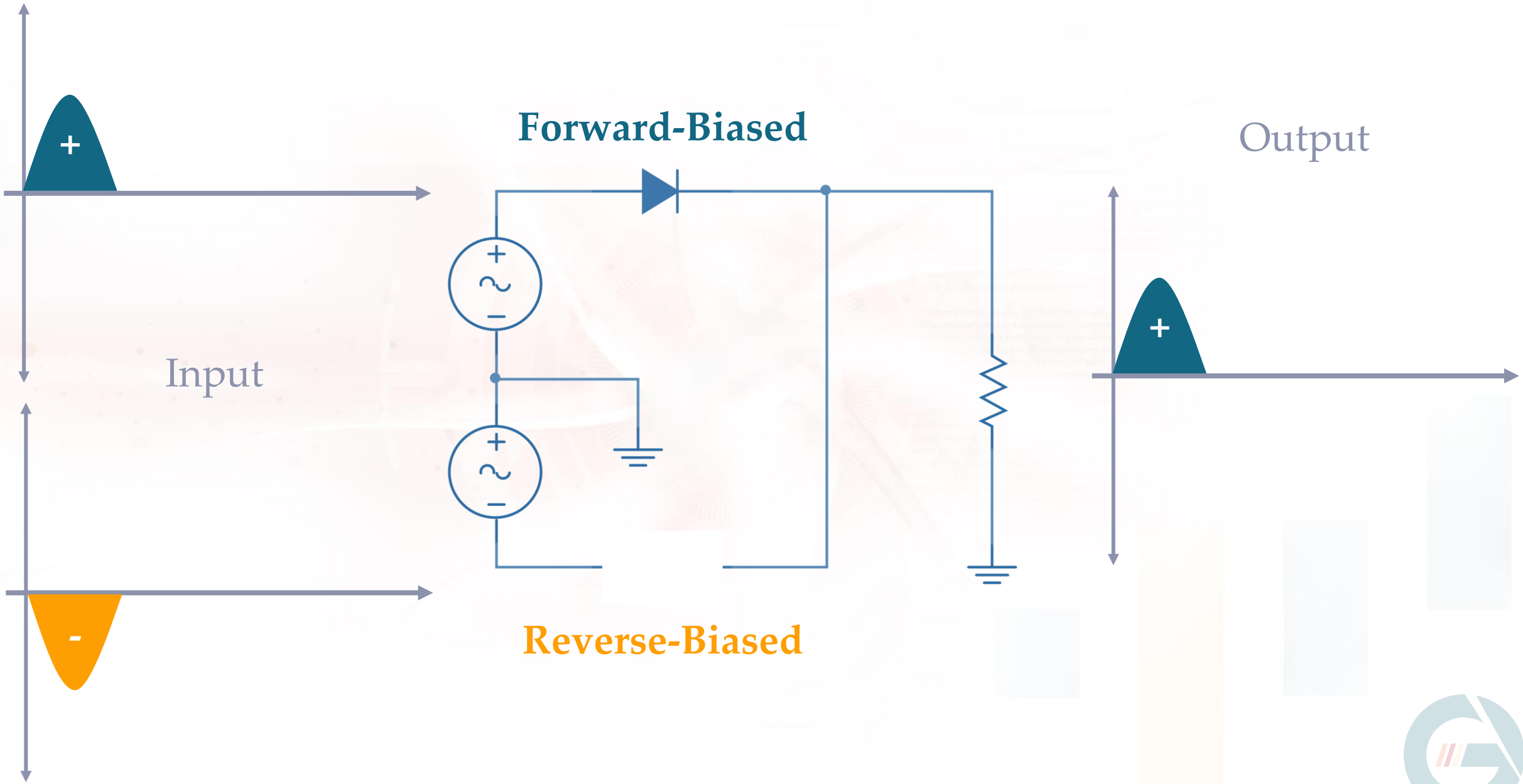

FULL-WAVE CENTER-TAPPED RECTIFIER

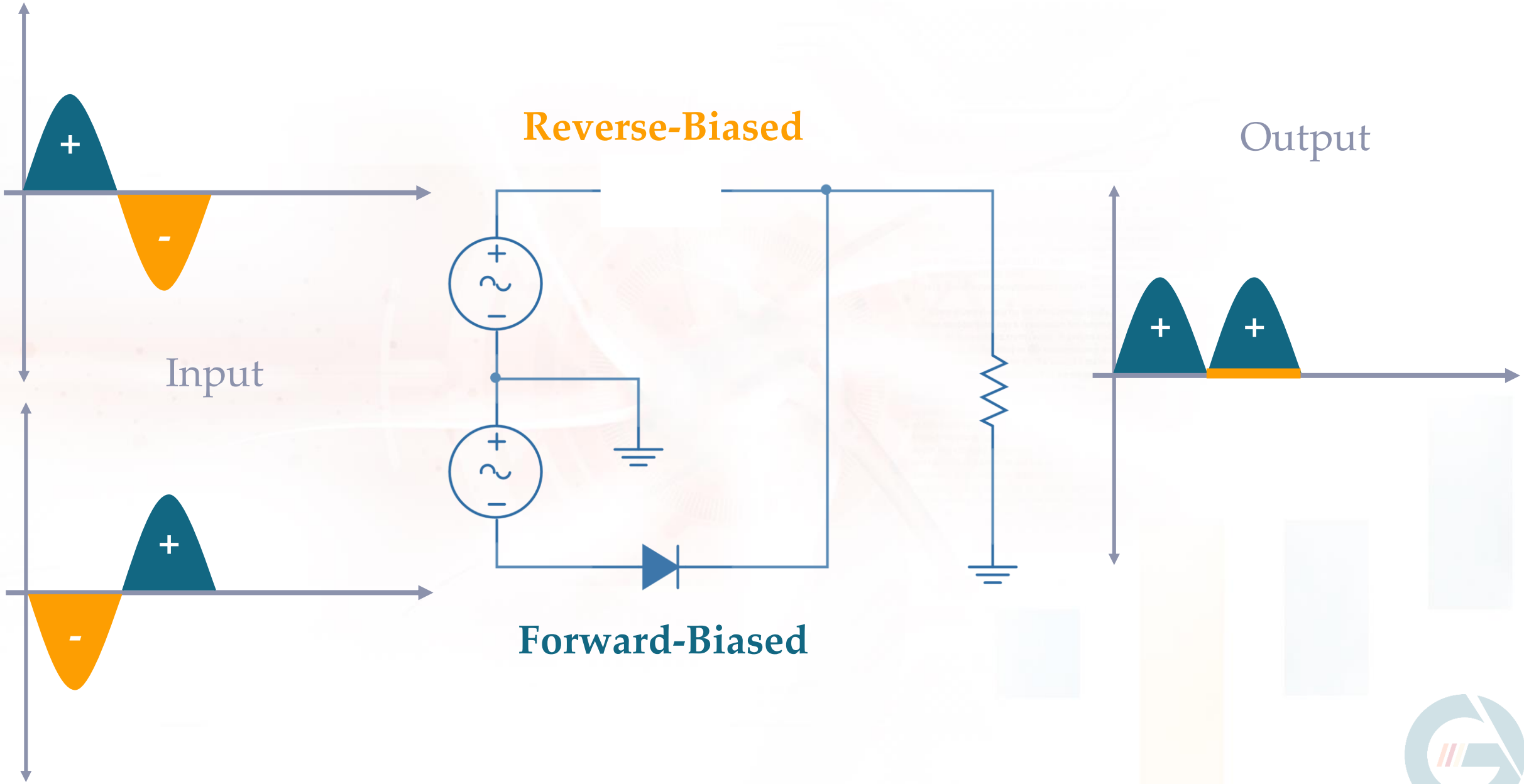

FULL-WAVE CENTER-TAPPED RECTIFIER

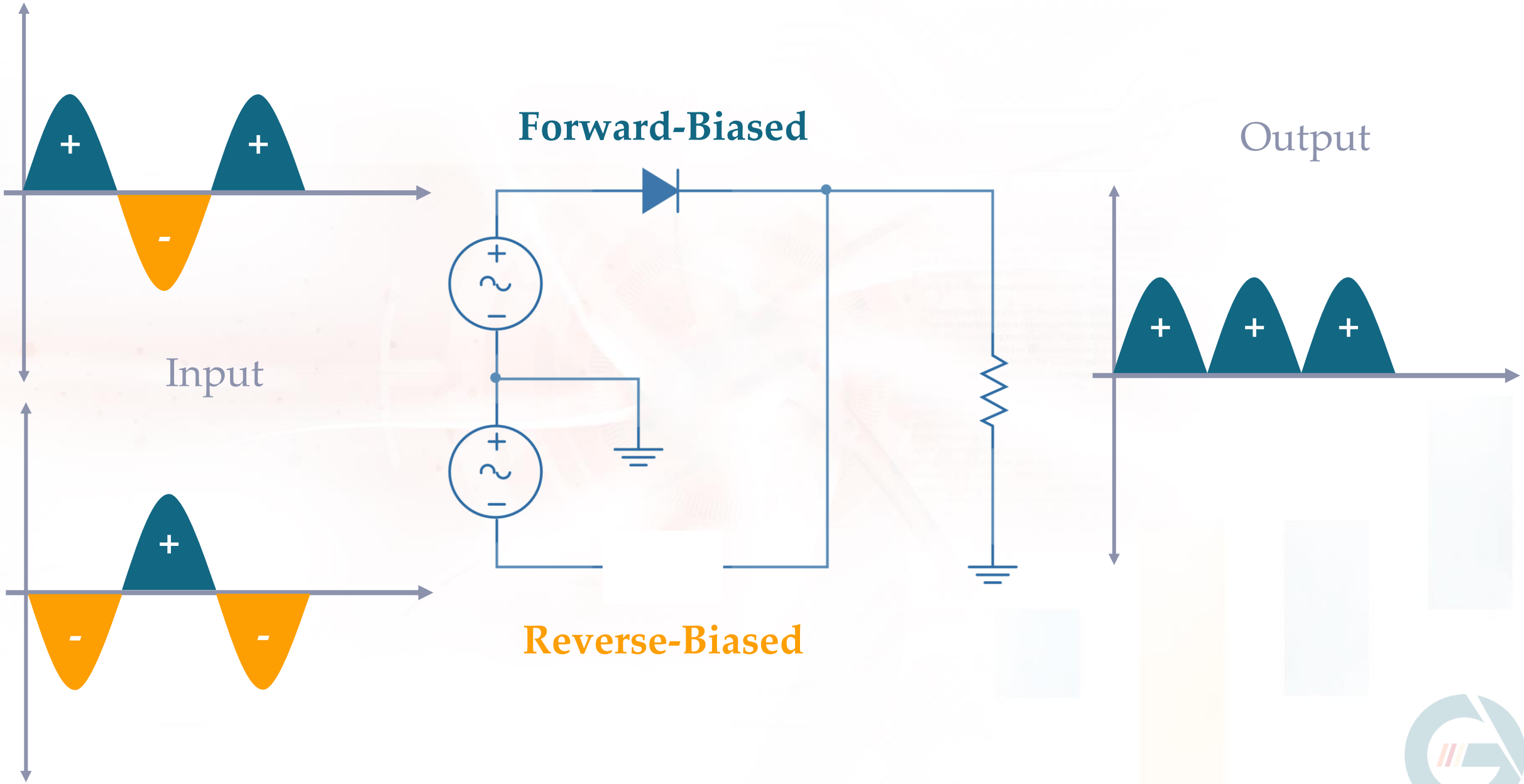

FULL-WAVE CENTER-TAPPED RECTIFIER

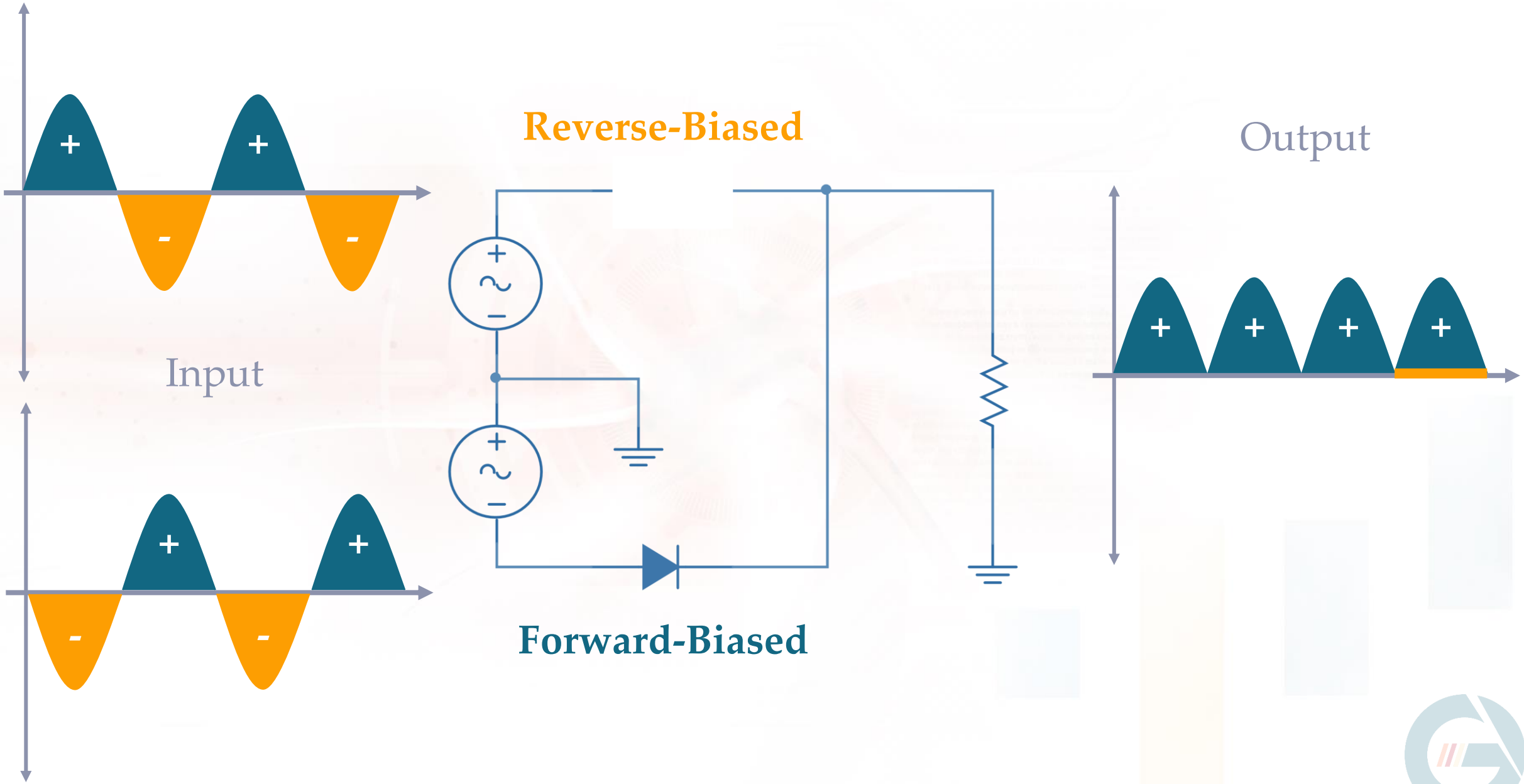

FULL-WAVE BRIDGE TYPE RECTIFIER

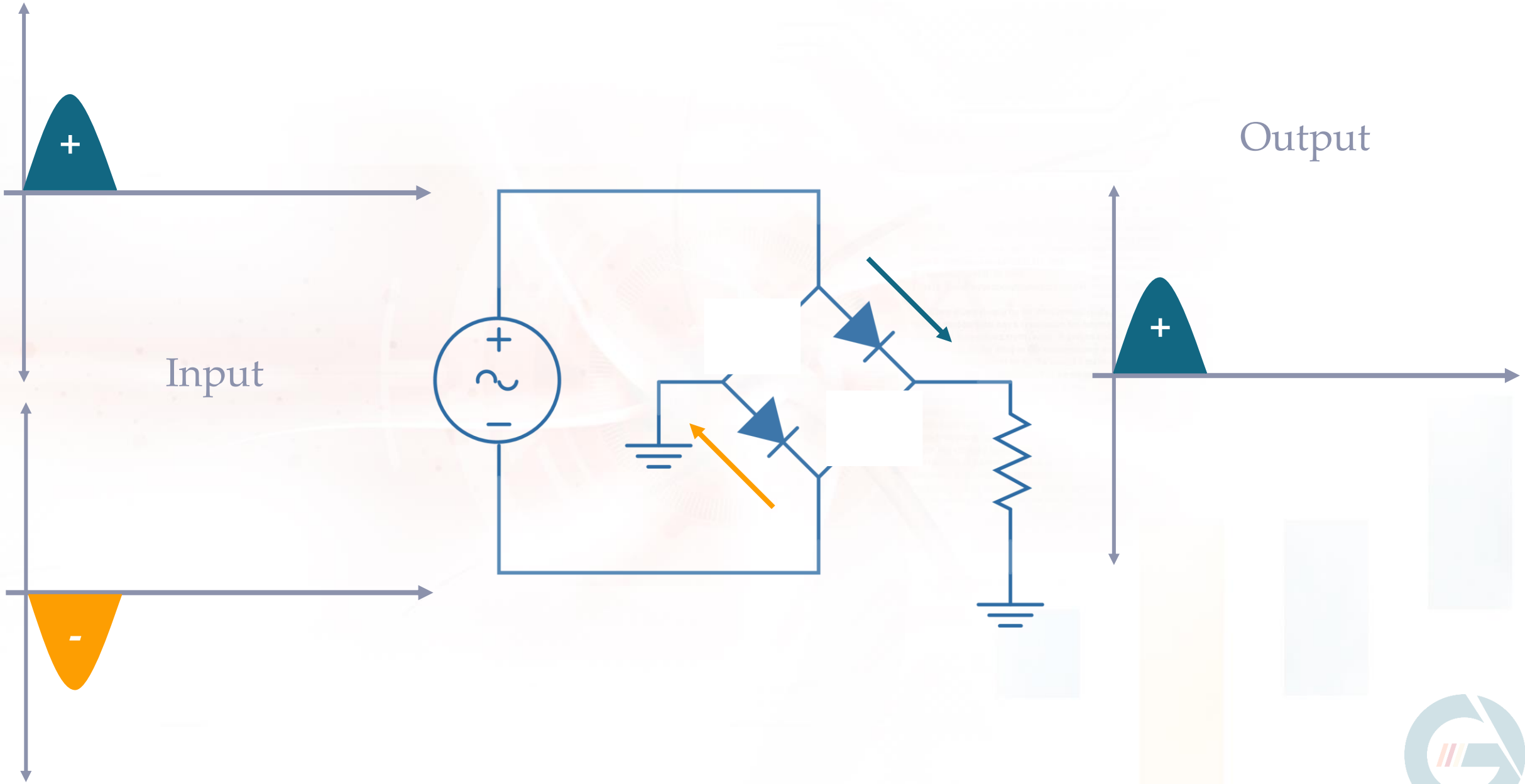

FULL-WAVE BRIDGE TYPE RECTIFIER

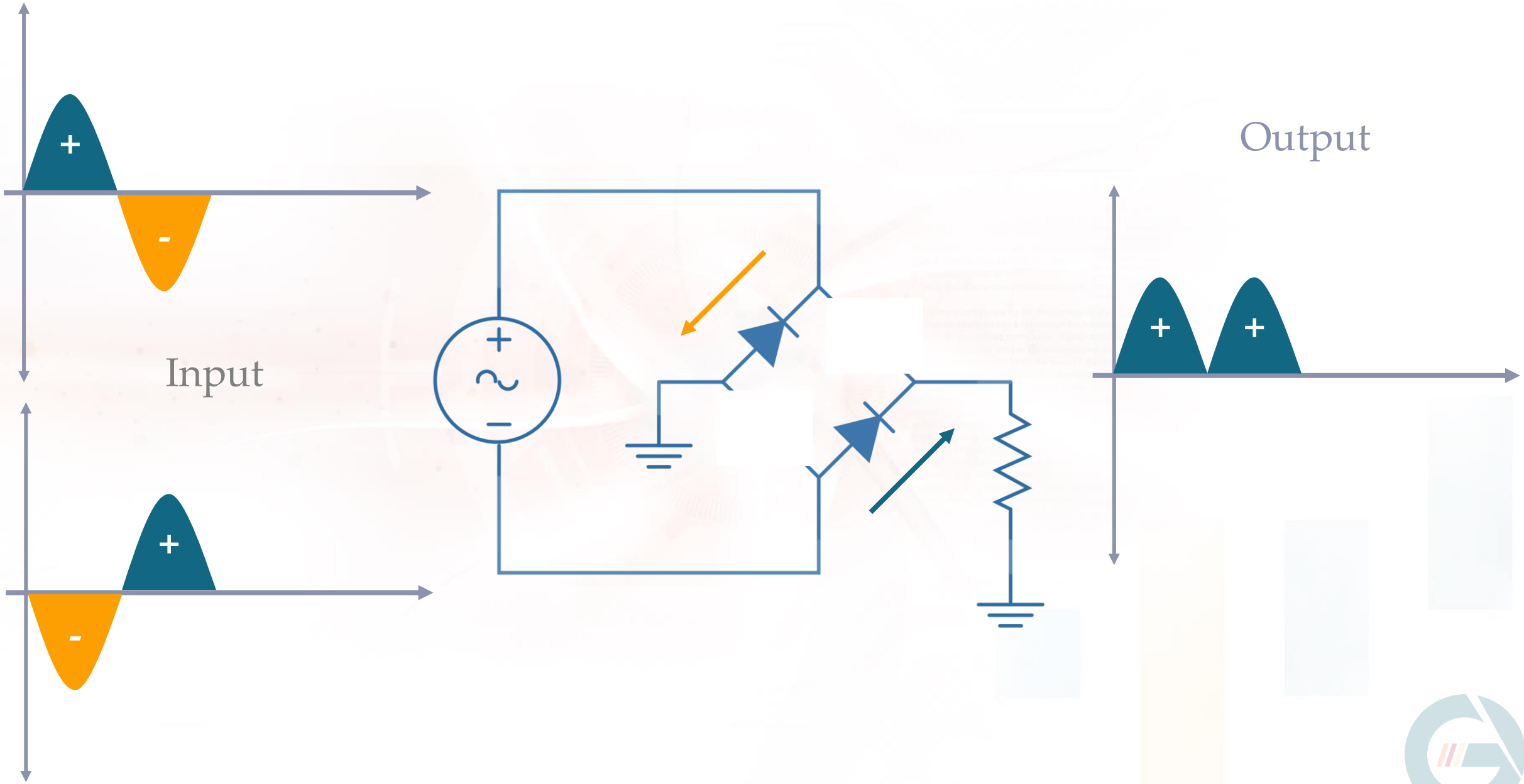

FULL-WAVE BRIDGE TYPE RECTIFIER

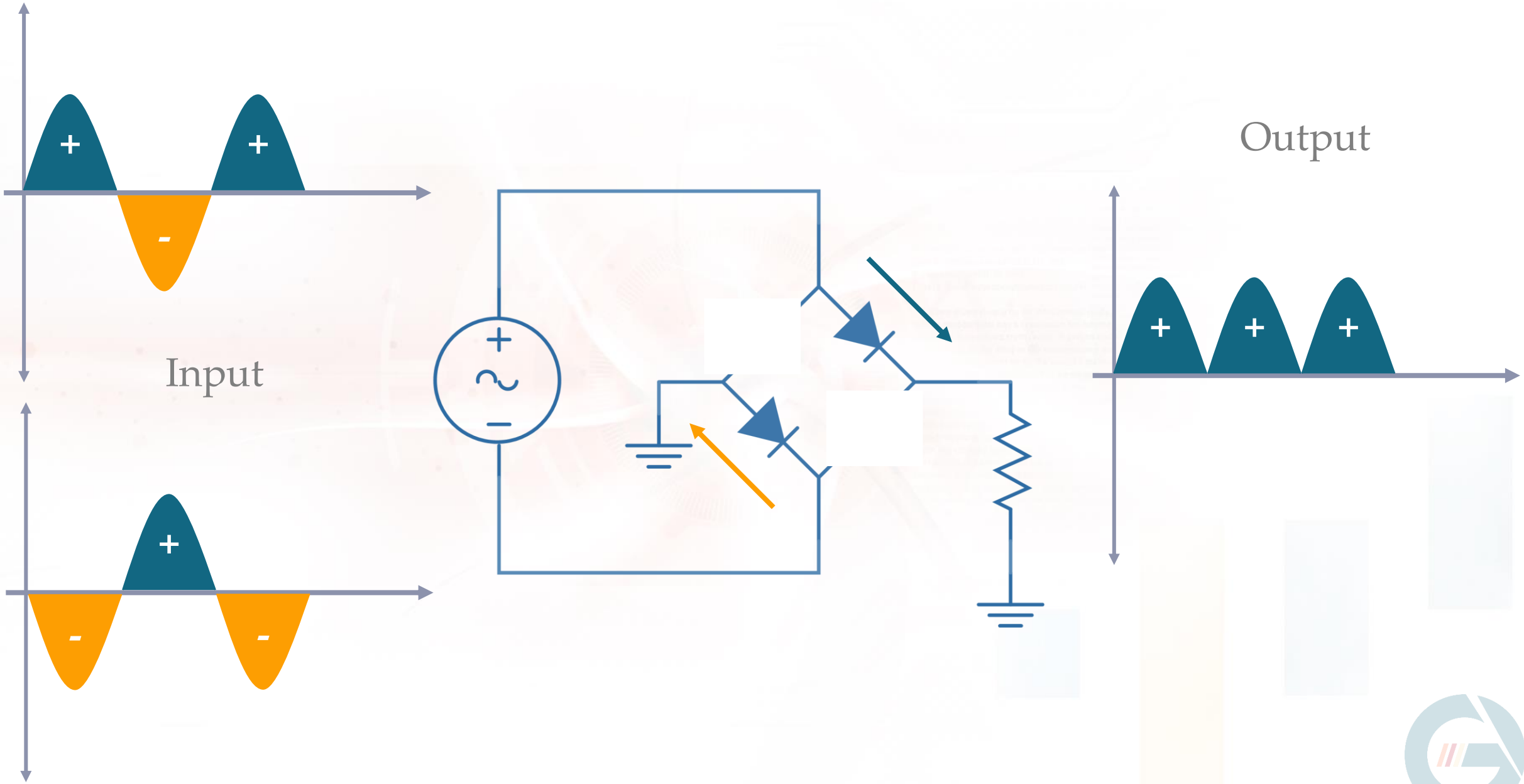

FULL-WAVE BRIDGE TYPE RECTIFIER

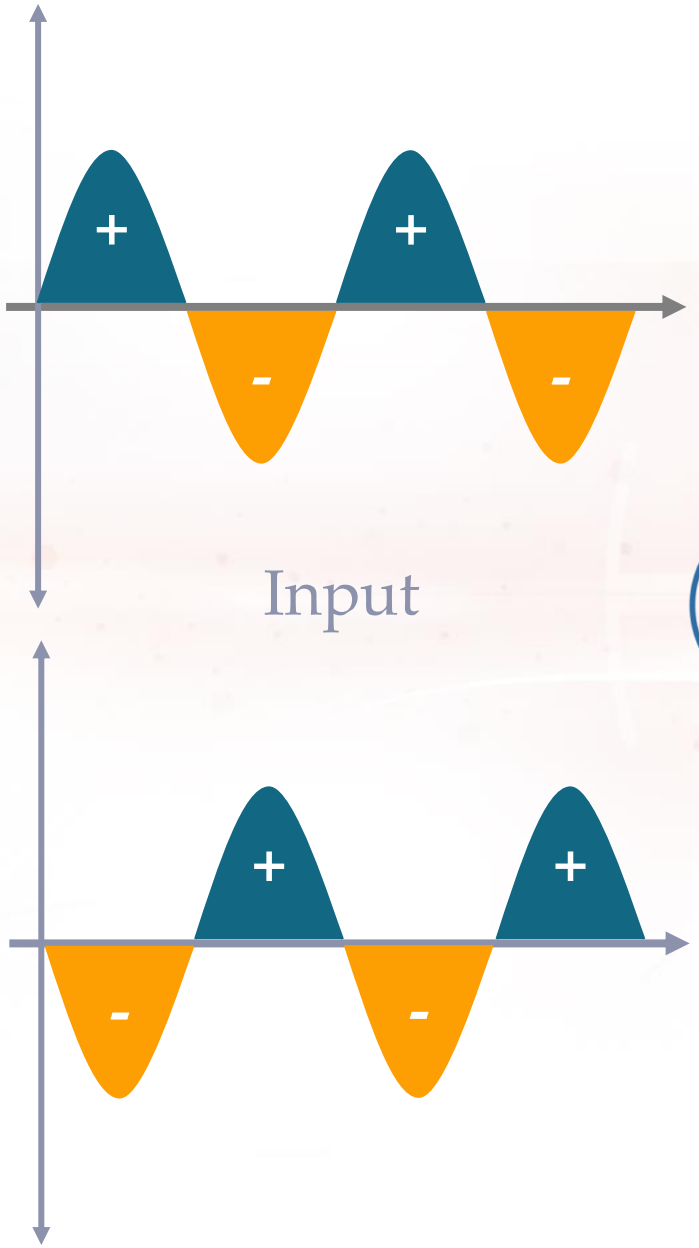

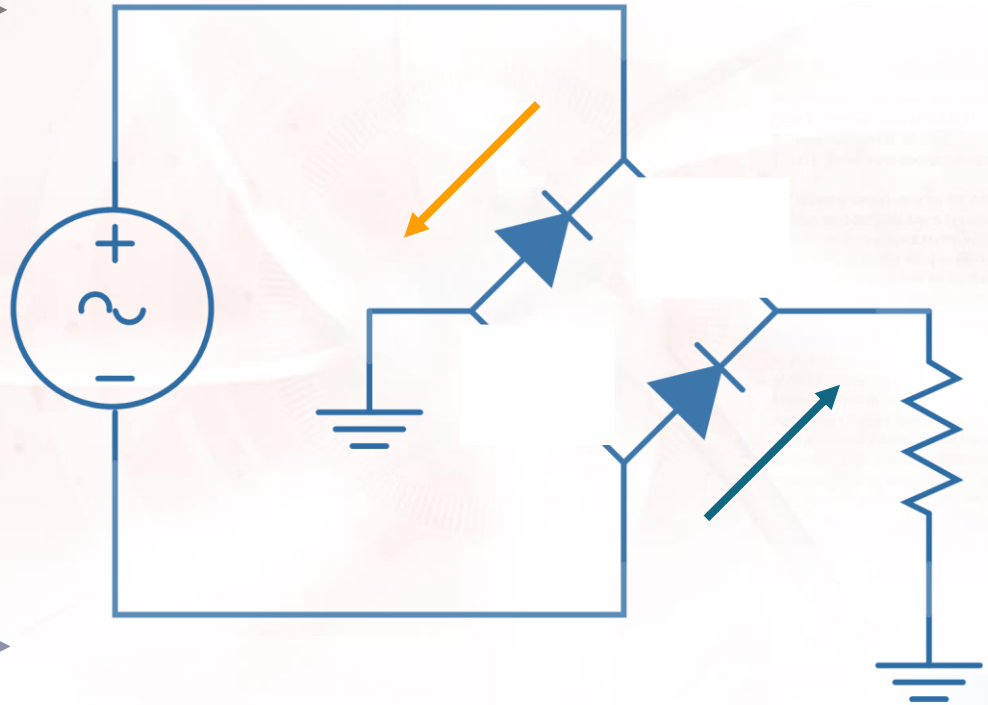

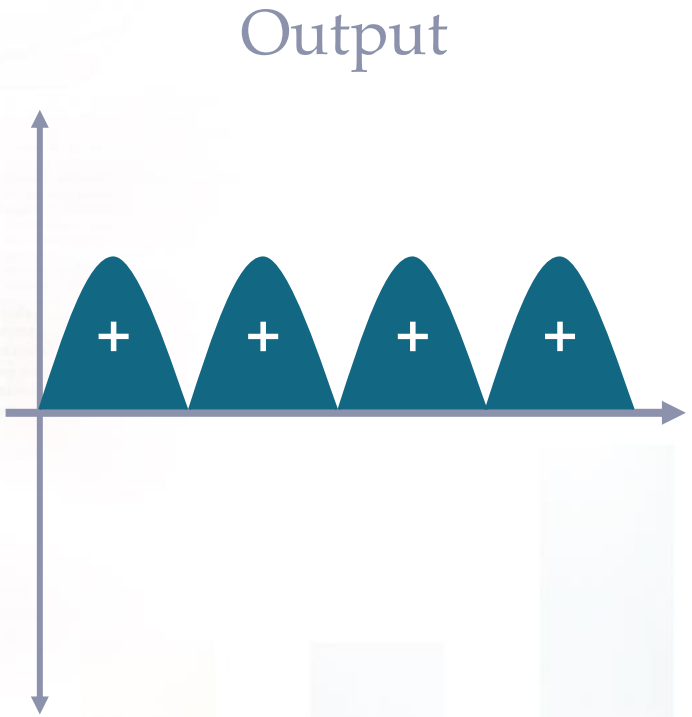

LABORATORY